P1009211

CANTONI&C
BOFFALORA-T. (MI) ITALY

REAR TIPPER

TRAKKER AT 380T41-45-50

IVECO

I.M. Export

01530741

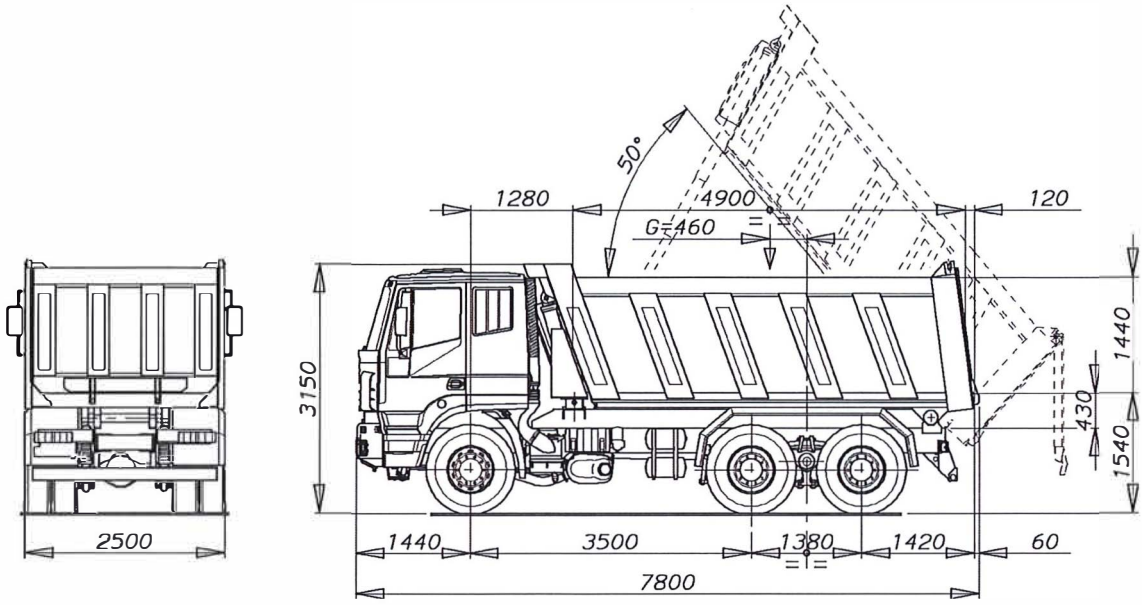

TECHNICAL DATA

"CE"

LIFTING
- Frontal telescopic cylinder.
- Pneumatic, modulated body descent control.
- Safety cable at the end of lifting.
- Stabiliser bar.
- Tipping time: 30 sec

SUBFRAME
- Side frame in bent steel sheet.
- Anti-torsion cross-member in the back side.
- Mixed type frame fixing (front screws with springs).

DUMP-BODY
- Capacity, 16 cu.m.
- Inside dimensions, 4740 x 2310 mm
- Structure in bent steel sheet.
- Body floor in antiabrasion steel (HB 450), thickness 8 mm
- Boards in antiabrasion steel (HB 400), thickness 5 mm
- Front board equipped with cab protection roof and spare wheel holder.
- Fixed sideboards.
- Rear board with automatic unhooking device.

WEIGHTS (kg)

Dump body 4300
Net weight of the dump truck 14000
Payload 19000
G.V.W. 33000

- Dimensions and weights are not binding and may undergo variations.